REVISIONS			
REV	DESCRIPTION	DATE	APPROVED
0.1	INITIAL RELEASE	WW1827	

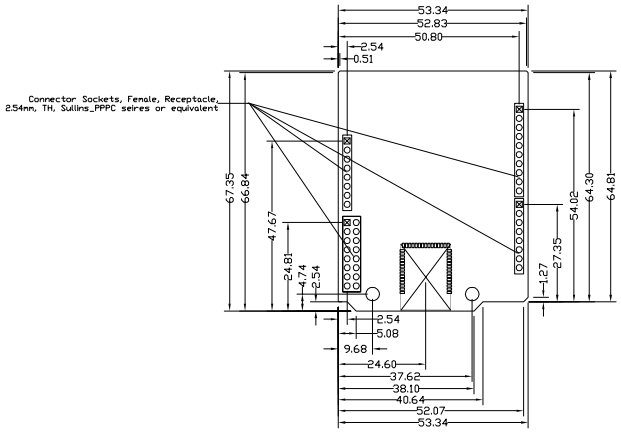

TOP VIEW

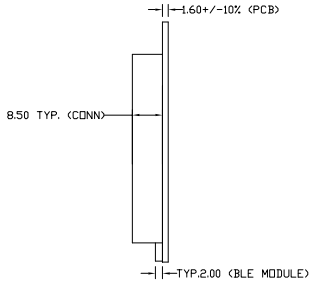

SIDE VIEW

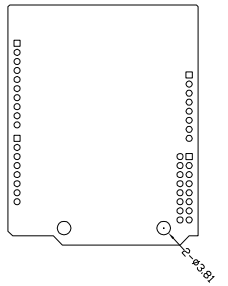

BOTTOM VIEW

UNLESS OTHERWISE SPECIFIED	SIGNATURES	DATE	CYPRESS SEMICONDUCTOR Corp.
DIMENSIONS ARE IN MM TOLERANCES ON: +/- 0.2	DRAWN:	WW1827	
	CHECKED		
	ENGRG		CYBLE-416045-EVAL
ANGLES +/- 1 DEGREE	ISSUED		

SIZE	REV NO	DWG NO
	0.1	

SCALE 1:1 | THE 3RD PROJECTION | SHEET: 1 OF 1